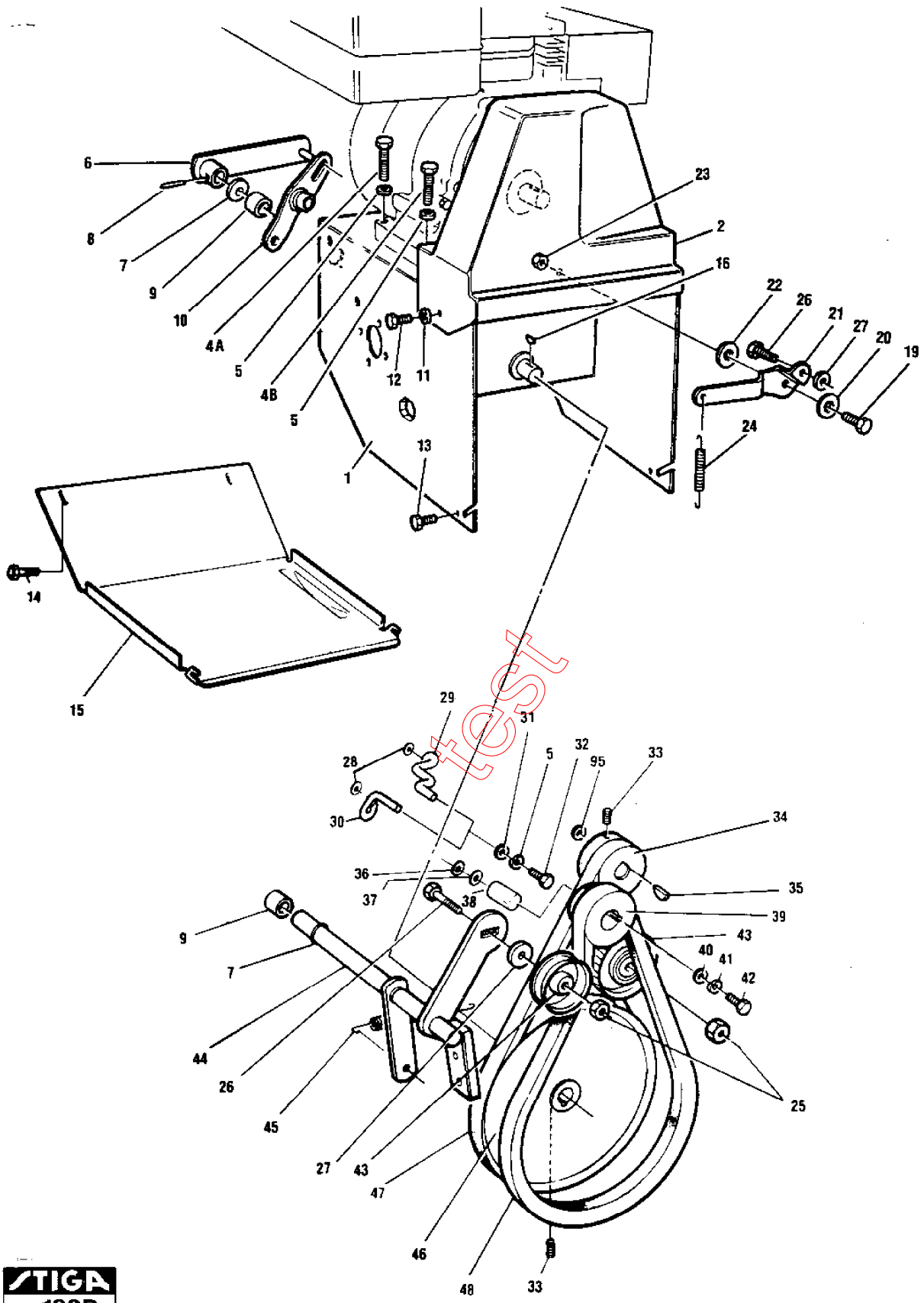

STIGA 133D SPARE PARTS

Section: 523, 725T, 825, 825T BELT TRANSMISSION

Pos.	Quantity 1813	1815	1814 1816	Spare part No	Description	Kit	Notes	New
1	1	1	1	1812-0687-01	Motor mount frame			
2	1	1	1	1812-0562-01	Belt guard			
4A	2	2	2	9988-3632-12	Screw		32 mm	
4B	2	2	2	9988-3638-12	Screw		38 mm	
5	6	6	6	9683-0030-02	Lock washer			
6	1	1	1	1812-0446-01	Lever			
7	2	2	2	9699-0038-02	Flat washer			
8	1	1	1	1812-0401-01	Pin			
9	2	2	2	1812-0328-01	Bushing			
10	1	1	1	1812-0447-01	Lever			
11	2	2	2	9699-0026-02	Flat washer			
12	2	2	2	1812-0384-01	Screw			
13	4	4	4	1812-0385-01	Screw			
14	4	4	4	1812-0384-01	Screw			
15	1	1	1	1812-0452-01	Bottom panel			
16	1	1	1	1812-0307-01	Key			
19	1	1	1	9988-3619-16	Screw			
20	1	1	1	9699-0062-02	Flat washer			
21	1	1	1	1812-0355-01	Lever			
22	1	1	1	1812-0356-01	Spacer			
23	1	1	1	9743-3621-32	Nut			
24	1	1	1	1812-0329-01	Spring			
25	2	2	2	9743-3721-32	Nut			
26	2	2	2	9988-3732-12	Screw			
27	2	2	2	9699-0029-02	Flat washer			
28	2	2	2	1812-0730-01	Spacer			
29	1		1	1812-0382-01	Belt guide		523, 725T	
29		1	1	1812-0532-01	Belt guide		825, 825T	
30		1	1	1812-0533-01	Belt guide		825, 825T	
30	1		1	1812-0383-01	Belt guide		523, 725T	
31	2	2	2	9699-0028-02	Flat washer			
32	2	2	2	9987-5125-16	Screw			
33	2	2	2	1812-1118-01	Screw			
34	1			1812-0350-01	Engine pulley			
34		1	1	1812-0381-01	Engine pulley			
35	1	1	1	1812-0718-01	Key			
36	1	1	1	1812-0361-01	Washer			
37		1	1	1812-0407-01	Washer			
38		1	1	1812-0656-01	Spacer			
38	1			1812-1117-01	Spacer			
39		1	1	1812-0561-01	Engine pulley			
39	1			1812-0332-01	Engine pulley			
40	1	1	1	1812-0283-01	Washer			
41	1	1	1	9683-0035-02	Lock washer			
42	1	1	1	9987-5225-16	Screw			
43	2	2	2	1812-0305-01	Tension roller			
44	1	1	1	1812-0638-01	Control shaft			
45	1	1	1	1812-0212-01	Spring			
46	1	1	1	1812-0357-01	Pulley		8"	
46			1	1812-0591-01	Pulley		5"	
47		1		1812-9008-01	V-belt		Hjuldrivning	
47	1			1812-9009-01	V-belt		Hjuldrivning	
47			1	1812-9010-01	V-belt		Banddrivning	
48	1			1812-9012-01	V-belt		Snöskruv 523	
48		1		1812-9013-01	V-belt		Snöskruv 825	
95			1	1812-0407-01	Washer			